POTENTIAL TRANSFORMERS

THREE PHASE VOLTAGE TRANSFORMER — *MODEL* 3VTN

POTENTIAL TRANSFORMERS

600V CLASS

FEATURES

- UL Recognized
- Three transformers in one case
- The core and coil assembly is encased in a thermoplastic shell and filled with resin.
- The transformer has a clear plastic terminal cover.
- Designed for Line to Neutral Connections

® E93779 ® LR89403

3VTN

SPECIFICATIONS

Frequency 60Hz
Standard Secondary Voltage ..... 120 Volts L-N
Accuracy Class (per phase) ..... 0.6 W, 1.2 X at 60Hz
Thermal Rating (per phase) ..... 150VA at 30°C Amb.
100VA at 55°C Amb.
Operation (fused) ..... Line-to-Neutral
Secondary Fuses ..... BBS
Insulation Level ..... 0.6kV, 10kV BIL Full Wave
Terminals ..... Brass Screws No. 8-32 UNC
Weight ..... Approximately 24 Lbs.

APPLICATION AND ORDERING DATA

CATALOG NUMBER	LINE TO NEUTRAL VOLTAGE RATING	TURNS RATIO	PRIMARY FUSE KTK-R	SECONDARY FUSE BBS (250V)
3VTN-460-069F	69.3:120	0.58:1	5.0A	1.6 AMPS
3VTN-460-120F	120:120	1:1	4.0A	
3VTN-460-240F	240:120	2:1	2.0A	
3VTN-460-277F	277:120	2.31:1	2.0A	
3VTN-460-300F	300:120	2.5:1	1.5A	
3VTN-460-346F	346:120	2.88:1	1.5A	
3VTN-460-069FF	69.3:120	0.58:1	5.0A	1.6 AMPS (Included)
3VTN-460-120FF	120:120	1:1	4.0A	
3VTN-460-240FF	240:120	2:1	2.0A	
3VTN-460-277FF	277:120	2.31:1	2.0A	
3VTN-460-300FF	300:120	2.5:1	1.5A	
3VTN-460-346FF	346:120	2.88:1	1.5A	

NOTE: Only ground N & n terminals if source is 3-phase, 4 wire effectively grounded.

* Rec. Primary Fuse
F = Primary Fuse Block Provided
FF = Primary & Secondary Fuse Blocks Provided

CONNECTION DIAGRAM

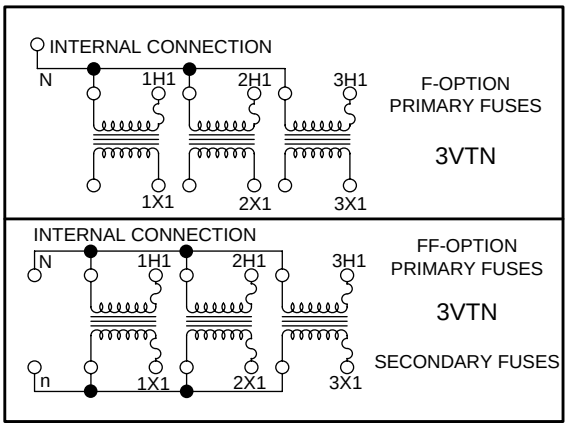

DIMENSIONS

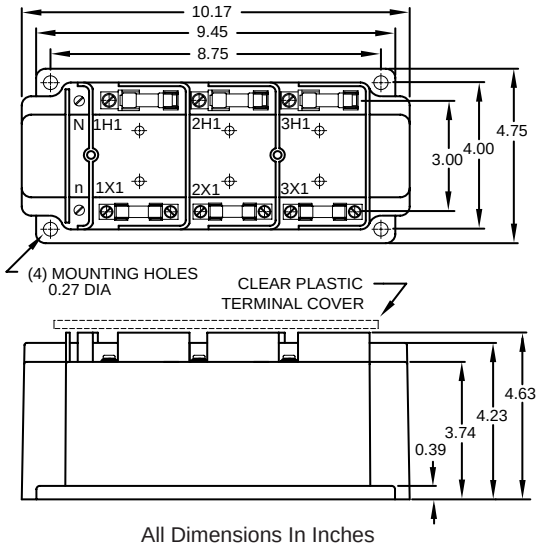

All Dimensions In Inches

FLEX-CORE®
Div. Morlan & Associates, Inc.

Shop for Power Metering products online at: www.PowerMeterStore.com 1.888.610.7664